WALL MOUNTED CONTROLLER

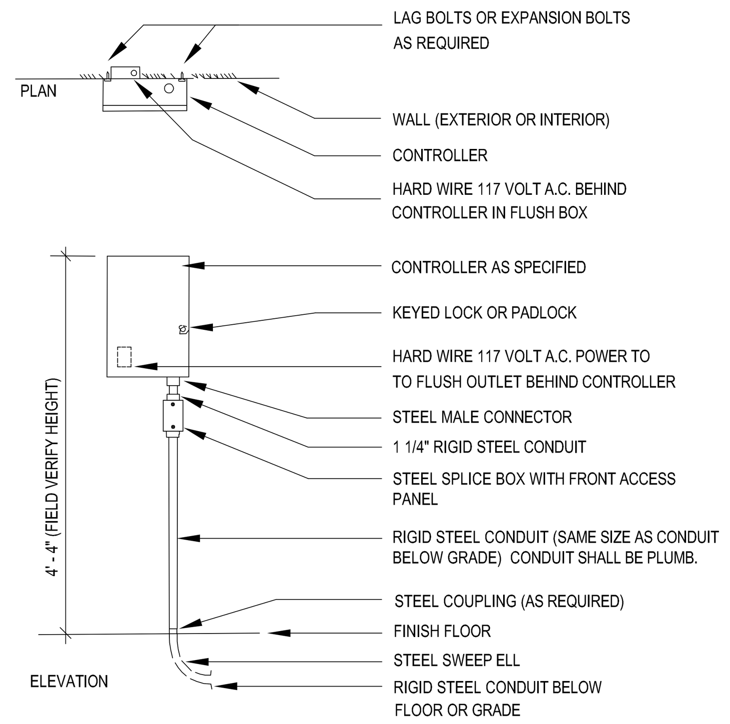

WALL MOUNTED CONTROLLER

(NOT TO SCALE)

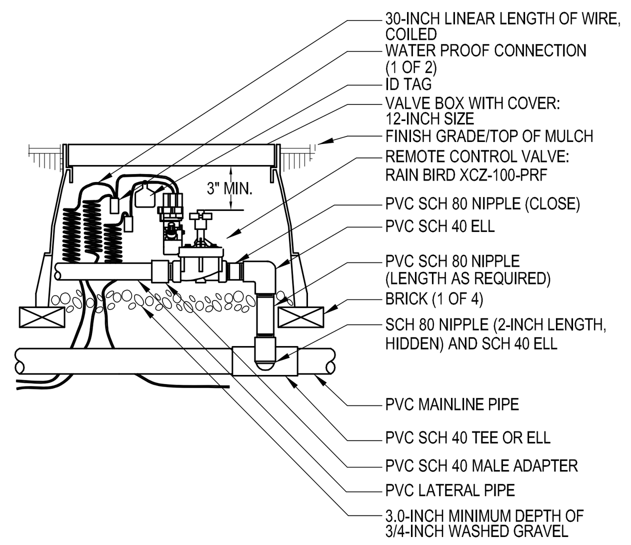

REMOTE CONTROL VALVE

(NOT TO SCALE)

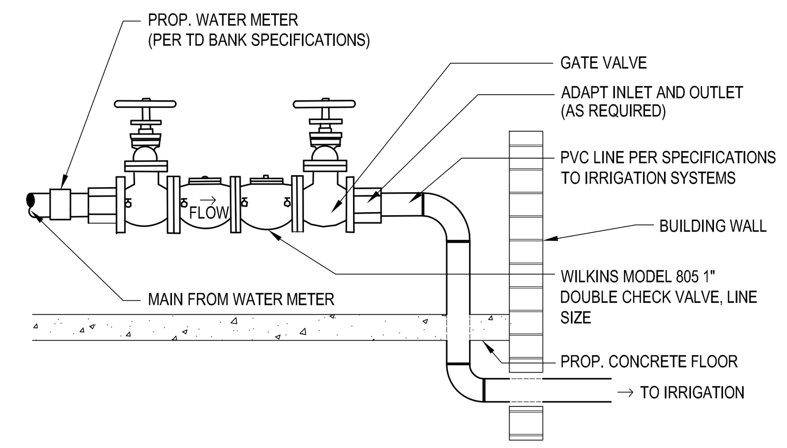

BACKFLOW PREVENTER

(NOT TO SCALE)

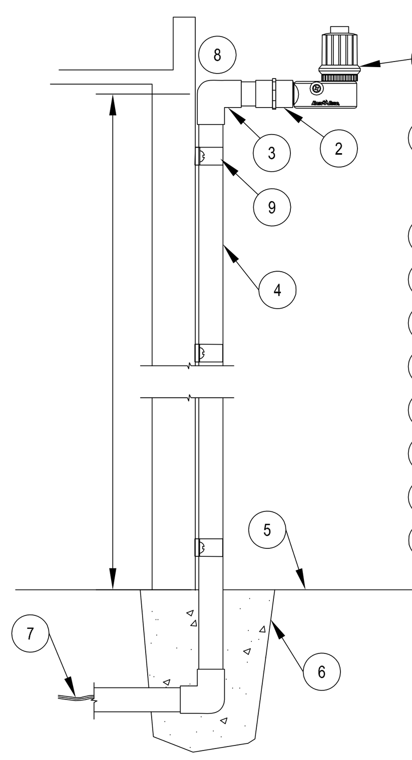

1. RAIN GAUGE: RAIN BIRD ETMRG LOCATED AT LEAST 16" AWAY FROM THE BUILDING WALL WITH OPEN VIEW OF SKY
2. FEMALE ADAPTER (SLIP X FIPT)
3. GALVANIZED 90° EL (1 OF 2)
4. 3/4-INCH GALVANIZED PIPE
5. FINISHED GRADE
6. CONCRETE BASE
7. WIRE TO IRRIGATION CONTROLLER
8. BUILDING ROOF AND FASCADE
9. SECURE WITH APPROVED PIPE ANCHOR (1 OF 3)

RAIN GAUGE - ETMRG - POLE MOUNT

(NOT TO SCALE)

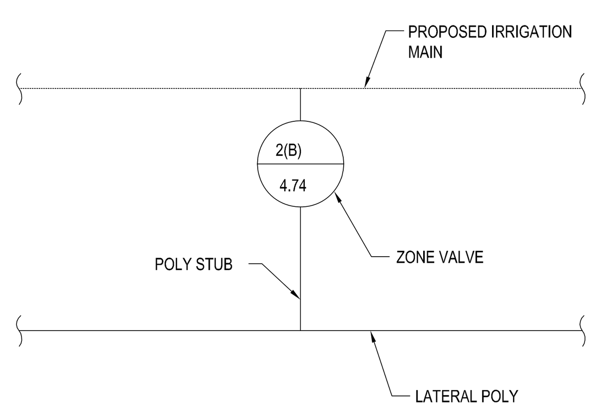

TYPICAL ZONE VALVE CONNECTION

(NOT TO SCALE)

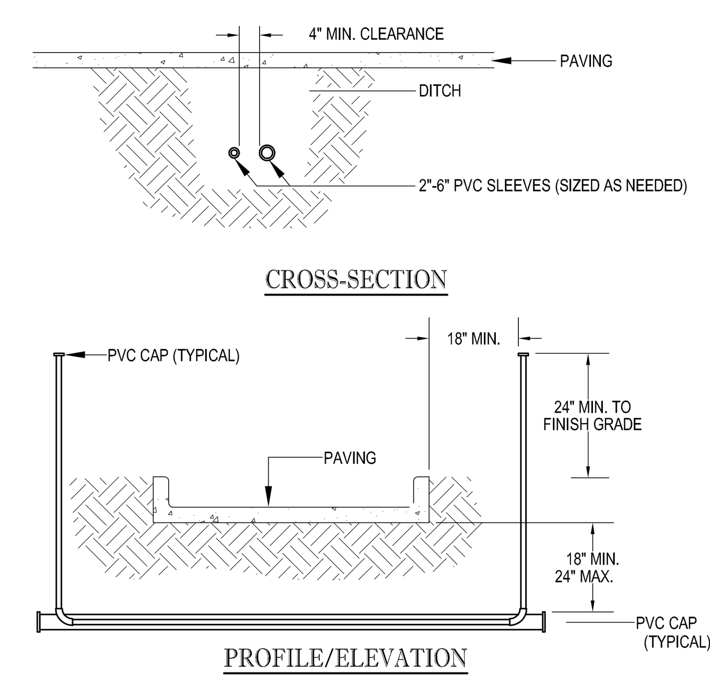

NOTES:
1. ALL PVC IRRIGATION SLEEVES TO BE CLASS 200 PIPE.
2. ALL JOINTS TO BE SOLVENT WELDED AND WATERTIGHT.
3. WHERE THERE IS MORE THAN ONE SLEEVE, EXTEND THE SMALLER SLEEVE TO 24-INCHES MINIMUM ABOVE FINISH GRADE.
4. MECHANICALLY TAMP TO 95% PROCTOR.

SLEEVING

(NOT TO SCALE)

IRRIGATION SPECIFICATIONS

PART 1 - GENERAL

1.01 SCOPE

A. PROVIDE COMPLETE SPRINKLER INSTALLATION AS DETAILED AND SPECIFIED HEREIN, INCLUDING FURNISHING ALL LABOR, MATERIALS, AND EQUIPMENT FOR THE PROPER INSTALLATION. WORK INCLUDES BUT IS NOT LIMITED TO:
1. TRENCHING AND BACKFILL.
2. AUTOMATIC CONTROLLED SYSTEM.
3. UPON COMPLETION OF INSTALLATION, SUPPLY DRAWINGS SHOWING DETAILS OF CONSTRUCTION INCLUDING LOCATION OF MAINLINE PIPING, MANUAL AND AUTOMATIC VALVES, ELECTRICAL SUPPLY TO VALVES, AND SPECIFICALLY EXACT LOCATION OF AUTOMATIC VALVES.

B. NOTE: ALL SLEEVES AS SHOWN ON PLANS WILL BE FURNISHED BY GENERAL CONTRACTOR. METER AND POWER SOURCE TO BE PROVIDED BY GENERAL CONTRACTOR AS REQUIRED BY LOCAL JURISDICTION.

1.02 APPLICABLE STANDARDS

A. ASTM
B. D2464 - POLY (VINYL CHLORIDE) (PVC) PLASTIC PIPE FITTINGS THREADED, SCHEDULE 40
C. D2466 - POLY (VINYL CHLORIDE) (PVC) PLASTIC PIPE FITTINGS SOCKET TYPE, SCHEDULE 40
D. D2564 - SOLVENT CEMENTS FOR POLY (VINYL CHLORIDE) (PVC) PLASTIC PIPE FITTINGS
E. STANDARD RECOMMENDED PRACTICE FOR:
1. D2855 - MAKING SOLVENT - CEMENTED JOINTS WITH POLY (VINYL CHLORIDE) (PVC) PIPE AND FITTINGS.

1.03 MAINTENANCE AND GUARANTEE

A. MATERIALS AND WORKMANSHIP SHALL BE FULLY GUARANTEED FOR ONE (1) YEAR AFTER FINAL ACCEPTANCE.

B. PROVIDE MAINTENANCE OF SYSTEM, INCLUDING RAISING AND LOWERING OF HEADS TO COMPENSATE FOR LAWN GROWTH, CLEANING AND ADJUSTMENT OF HEADS, RAISING AND LOWERING OF SHRUB HEADS TO COMPENSATE FOR SHRUB GROWTH, FOR ONE (1) YEAR AFTER COMPLETION OF INSTALLATION.

C. CONTRACTOR SHALL BLOWOUT, CLOSE AND OPEN THE SYSTEM ONCE DURING THE GUARANTEE PERIOD.

D. GUARANTEE IS LIMITED TO REPAIR AND REPLACEMENT OF DEFECTIVE MATERIALS OR WORKMANSHIP, INCLUDING REPAIR OF BACKFILL SETTLEMENT.

1.04 SUBMITTALS

A. USE OF MATERIALS DIFFERING IN QUALITY, SIZE, OR PERFORMANCE FROM THOSE SPECIFIED WILL ONLY BE ALLOWED UPON WRITTEN APPROVAL OF OWNER/IRRIGATION DESIGNER. THE DECISION WILL BE BASED ON COMPARATIVE ABILITY OF MATERIAL OR ARTICLE TO PERFORM FULLY ALL PURPOSES OF MECHANICS AND GENERAL DESIGN CONSIDERED TO BE POSSESSED BY ITEM SPECIFIED.

BIDDERS DESIRING TO MAKE A SUBSTITUTION FOR SPECIFIED SPRINKLERS SHALL SUBMIT MANUFACTURER'S CATALOG SHEET SHOWING FULL SPECIFICATION OF EACH TYPE OF SPRINKLER PROPOSED AS A SUBSTITUTE, INCLUDING DISCHARGE IN GPM MAXIMUM ALLOWABLE OPERATING PRESSURE AT SPRINKLER.

APPROVAL OF SUBSTITUTE SPRINKLER SHALL NOT RELIEVE CONTRACTOR OF HIS RESPONSIBILITY TO DEMONSTRATE THAT FINAL INSTALLED SPRINKLER SYSTEM WILL OPERATE ACCORDING TO INTENT OF ORIGINALLY DESIGNED AND SPECIFIED SYSTEM.

B. IT IS THE RESPONSIBILITY OF THE IRRIGATION CONTRACTOR TO DEMONSTRATE THAT FINAL INSTALLED SPRINKLER SYSTEM WILL OPERATE ACCORDING TO INTENT OF ORIGINALLY DESIGNED AND SPECIFIED SYSTEM. IF IRRIGATION CONTRACTOR NOTES ANY PROBLEMS IN HEAD SPACING OR POTENTIAL COVERAGE, IT IS HIS RESPONSIBILITY TO NOTIFY THE IRRIGATION DESIGNER IN WRITING, BEFORE PROCEEDING WITH WORK. IRRIGATION CONTRACTOR GUARANTEES 100% COVERAGE OF ALL AREAS TO BE IRRIGATED.

C. CONTRACTOR TO FURNISH AN AS BUILT DRAWING OF ENTIRE SYSTEM FOR REVIEW PRIOR TO ACCEPTANCE.

1.05 TESTING

A. PERFORM TESTING REQUIRED WITH OTHER TRADES, INCLUDING EARTHWORK, PAVING, AND PLUMBING, TO AVOID UNNECESSARY CUTTING, PATCHING AND BORING.

1.06 COORDINATION

A. COORDINATE INSTALLATION WITH OTHER TRADES, INCLUDING EARTHWORK, PAVING, AND PLUMBING, TO AVOID UNNECESSARY CUTTING, PATCHING AND BORING.

PART 2 - PRODUCTS

2.01 GENERAL

A. SPRINKLER MAINS: SPRINKLER MAINS ARE THAT PORTION OF PIPING FROM WATER SOURCE TO OPERATING VALVES. THIS PORTION OF PIPING IS SUBJECT TO SURGES, BEING A CLOSED PORTION OF SPRINKLER SYSTEM. HYDRANT LINES ARE CONSIDERED A PART OF SPRINKLER MAIN.

B. LATERAL PIPING: LATERAL PIPING IS THAT PORTION OF PIPING FROM OPERATING VALVE TO SPRINKLER HEADS. THIS PORTION OF PIPING IS NOT SUBJECT TO SURGES, BEING AN "OPEN END" PORTION OF SPRINKLER SYSTEM.

2.02 POLY VINYL CHLORIDE PIPE (PVC)

A. PVC PIPE SHALL BE MANUFACTURED IN ACCORDANCE WITH COMMERCIAL STANDARDS NOTED HEREIN.

B. MARKING AND IDENTIFICATION: PVC PIPE SHALL BE CONTINUOUSLY AND PERMANENTLY MARKED WITH THE FOLLOWING INFORMATION: MANUFACTURER'S NAME, PIPE SIZE, TYPE OF PIPE, AND MATERIAL, SDR NUMBER, PRODUCT STANDARD NUMBER, AND THE NSF (NATIONAL SANITATION FOUNDATION) SEAL.

C. PVC PIPE FITTINGS: SHALL BE OF THE SAME MATERIAL AS THE PVC PIPE SPECIFIED AND SHALL BE COMPATIBLE WITH PVC PIPE FURNISHED.

2.03 POLYETHYLENE PIPE

A. POLYETHYLENE PIPE TO BE MANUFACTURED AND SUPPLIED IN ACCORDANCE WITH COMMERCIAL STANDARDS BY A REPUTABLE DEALER.

2.04 COPPER TUBING

A. HARD, STRAIGHT, LENGTHS OF DOMESTIC MANUFACTURE ONLY. NO COPPER TUBE OF FOREIGN EXTRUSION OR ANY SO-CALLED IRRIGATION TUBING (THIN WALL) SHALL BE USED.

2.05 COPPER TUBE FITTINGS

A. CAST BRASS OR WROUGHT COPPER, SWEAT-SOLDER TYPE.

2.06 WIRE

A. TYPE UF WITH 4-64" INSULATION WHICH IS UNDERWRITER'S LABORATORY APPROVED FOR DIRECT UNDERGROUND BURIAL WHEN USED IN A NATIONAL ELECTRIC CODE CLASS II CIRCUIT (30 VOLTS AC OR LESS).

2.07 SCHEDULE 80 PVC NIPPLES NIPPLES FOR HEADS AND SHRUB RISERS, WHERE APPLICABLE,

A. COMPOSED OF STANDARD SCHEDULE 40 PVC FITTINGS AND PVC MEETING NOTED STANDARDS. NO CLAMPS OR WIRES MAY BE USED. TO BE NOMINAL ONE-HALF (1/2") INCH DIAMETER BY EIGHT (8") INCHES LONG.

B. POLYETHYLENE NIPPLES SIX (6") INCHES LONG TO BE USED ON ALL POP-UP SPRAY HEADS.

2.08 MATERIALS - SEE IRRIGATION PLAN

A. SPRINKLER HEADS IN LAWN AREA AS SPECIFIED ON DESIGN PLAN.
B. PVC PIPE: CLASS 200, SPR 21
COPPER TUBING (MUNICIPAL CONNECTION): TYPE "M"
24V WIRE: SIZE 14, TYPE U.F.
C. ELECTRIC VALVES TO BE ALL PLASTIC CONSTRUCTION AS INDICATED ON PLANS.
D. REFER TO DRAWING FOR BACKFLOW PREVENTION REQUIREMENTS AND FLOW VALVE. COORDINATE EXACT LOCATION WITH IRRIGATION DESIGNER.

PART 3 EXECUTION

3.01 INSTALLATION - GENERAL

A. CONTRACTOR IS TO VERIFY PRESSURE AND FLOW RATES PRIOR TO BEGINNING INSTALLATION. SYSTEM SHALL BE DESIGNED AT PSI. CONTRACTOR TO PROVIDE ANY PRESSURE REDUCING VALVES OR BOOSTER PUMPS TO ACHIEVE STATIC PRESSURE AS STATED.
B. STAKING: BEFORE INSTALLATION IS STARTED, PLACE A STAKE WHERE EACH SPRINKLER IS TO BE LOCATED, IN ACCORDANCE WITH DRAWING. STAKING SHALL BE APPROVED BY IRRIGATION DESIGNER AS REQUIRED.
C. EXCAVATIONS: EXCAVATIONS ARE UNCLASSIFIED AND INCLUDE EARTH, LOOSE ROCK, ROCK OR ANY COMBINATION THEREOF, IN WET OR DRY STATE. BACKFILL TRENCHES WITH MATERIAL THAT IS SUITABLE FOR COMPACTION AND CONTAINS NO LUMPS, CLODS, ROCK, DEBRIS, ETC. SPECIAL BACKFILL SPECIFICATIONS, IF FURNISHED TAKE PREFERENCE OVER THIS GENERAL SPECIFICATION.
D. BACKFILL: FLOOD OR HAND-TAMP TO PREVENT AFTER SETTLING. HAND RAKE TRENCHES AND ADJOINING AREA TO LEAVE GRADE IN AS GOOD OR BETTER CONDITION THAN BEFORE INSTALLATION.
E. PIPING LAYOUT: PIPING LAYOUT IS DIAGRAMMATIC. ROUTE PIPING AROUND TREES AND SHRUBS IN SUCH A MANNER AS TO AVOID DAMAGE TO PLANTINGS. DO NOT DIG WITHIN BALL OF NEWLY PLANTED TREES OR SHRUBS.

3.02 PIPE INSTALLATION

A. SPRINKLER MAINS: INSTALL A FOUR (4") INCH MINIMUM WIDTH TRENCH WITH A MINIMUM OF TWELVE (12") INCHES OF COVER.
B. LATERAL PIPING: INSTALL A FOUR (4") INCH WIDE MINIMUM TRENCH DEEP ENOUGH TO ALLOW FOR INSTALLATION OF SPRINKLER HEADS AND VALVES, BUT IN NO CASE, WITH LESS THAN EIGHT (8") INCHES OF COVER.
C. TRENCHING: REMOVE LUMBER, RUBBISH, AND LARGE ROCKS FROM TRENCHES. PROVIDE FIRM, UNIFORM BEARING FOR ENTIRE LENGTH OF EACH PIPE LINE TO PREVENT UNEVEN SETTLEMENT. WEDGING OR BLOCKING OF PIPE WILL NOT BE PERMITTED. REMOVE FOREIGN MATTER OR DIRT FROM INSIDE OF PIPE BEFORE WELDING, AND KEEP PIPING CLEAN BY APPROVED MEANS DURING AND AFTER LAYING OF PIPE.

3.03 PVC PIPE AND FITTING ASSEMBLY

A. SOLVENT: USE ONLY SOLVENT RECOMMENDED BY MANUFACTURER TO MAKE SOLVENT-WELDED JOINTS. THOROUGHLY CLEAN PIPE AND FITTINGS OF DIRT, DUST AND MOISTURE BEFORE APPLYING SOLVENT.
B. PVC TO METAL CONNECTION: WORK METAL CONNECTIONS FIRST. USE A NON-HARDENING PIPE DOPE SUCH AS PERMATEX NO. 2 ON THREADED PVC ADAPTERS INTO WHICH PIPE MAY BE WELDED.

3.04 COPPER TUBING AND FITTING ASSEMBLY

A. CLEAN PIPE AND FITTING THOROUGHLY AND LIGHTLY SAND PIPE CONNECTIONS TO REMOVE RESIDUE FROM PIPE. ATTACH FITTINGS TO TUBING IN AN APPROVED MANNER USING 50-50 SOFT SOLID CORE SOLDER.

3.05 SHRUB SPRAY HEADS (FIXED)

A. SHRUB SPRAY HEADS: SUPPLY IN ACCORDANCE WITH MATERIALS LIST, WITH NOZZLING IN ACCORDANCE WITH DRAWINGS. DRAWINGS INDICATE SIZE OF NOZZLING AND DEGREE OF ARC. DETERMINE CORRECT DEGREE OF ARC OF NOZZLE (IF CONDITIONS WARRANT) BY AREA TO BE COVERED AND BY WIND CONDITIONS THAT MAY AFFECT COVERAGE.
B. HEIGHT: INSTALL HEADS ON PVC SCHEDULE 80 RISERS SUFFICIENTLY HIGH TO WATER UNDER SHRUBS AND PLANTS, OR AS DIRECTED BY THE IRRIGATION DESIGNER.

3.06 POP-UP SPRAY HEADS

A. SUPPLY POP-UP SPRAY HEADS IN ACCORDANCE WITH MATERIALS LIST AND PLAN. ATTACH SPRINKLER TO LATERAL PIPING WITH A SEMI-FLEXIBLE POLYETHYLENE NIPPLE NOT LESS THAN THREE (3") INCHES OR MORE THAN SIX (6") INCHES LONG.

3.07 VALVES

A. SUPPLY VALVES IN ACCORDANCE WITH MATERIALS LIST AND SIZED ACCORDING TO DRAWINGS. INSTALL VALVES IN A LEVEL POSITION IN ACCORDANCE WITH MANUFACTURER'S SPECIFICATIONS. SEE PLAN FOR TYPICAL INSTALLATION OF ELECTRIC VALVE, VALVE BOX.

3.08 WIRING

A. SUPPLY WIRING FROM THE AUTOMATIC SPRINKLER CONTROLS TO THE VALVES. NO CONDUIT WILL BE REQUIRED FOR U.F. WIRE UNLESS OTHERWISE NOTED ON THE PLAN. WIRE SHALL BE TUCKED UNDER THE PIPING.
B. A SEPARATE WIRE IS REQUIRED FROM THE CONTROL TO EACH ELECTRIC VALVE. A COMMON NEUTRAL WIRE IS ALSO REQUIRED FROM EACH CONTROL TO EACH OF THE VALVES SERVED BY EACH PARTICULAR CONTROL.
C. BUNDLE MULTIPLE WIRES AND TAPE THEM TOGETHER AT TEN (10') FOOT INTERVALS. INSTALL TEN (10") INCH EXPANSION COIL AT NOT MORE THAN ONE HUNDRED (100') FOOT INTERVALS. MAKE SPLICES WATERPROOF.

3.09 AUTOMATIC SPRINKLER CONTROLS

A. SUPPLY IN ACCORDANCE WITH IRRIGATION PLAN. INSTALL ACCORDING TO MANUFACTURER'S RECOMMENDATIONS.

3.10 TESTING

A. SPRINKLER MAINS: TEST SPRINKLER MAIN ONLY FOR A PERIOD OF TWELVE (12) TO FOURTEEN (14) HOURS UNDER NORMAL PRESSURE. IF LEAKS OCCUR, REPLACE JOINT OR JOINTS AND REPEAT TEST.
B. COMPLETE TESTS PRIOR TO BACKFILLING. SUFFICIENT BACKFILL MATERIAL MAY BE PLACED IN TRENCHES BETWEEN FITTINGS TO INSURE STABILITY OF LINE UNDER PRESSURE. IN EACH CASE, LEAVE FITTINGS AND COUPLINGS OPEN TO VISUAL INSPECTION FOR FULL PERIOD OF TEST.

3.11 FINAL ADJUSTMENT

A. AFTER INSTALLATION HAS BEEN COMPLETED, MAKE FINAL ADJUSTMENT OF SPRINKLER SYSTEM IN PREPARATION FOR IRRIGATION DESIGNER'S FINAL INSPECTION. COMPLETELY FLUSH SYSTEM TO REMOVE DEBRIS FROM LINES AND TURNING ON SYSTEM. CHECK SPRINKLERS FOR PROPER OPERATION AND PROPER ALIGNMENT FOR DIRECTION OF FLOW. CHECK EACH SECTION OF SPRAY HEADS FOR OPERATING PRESSURE AND BALANCE TO OTHER SECTIONS BY USE OF FLOW ADJUSTMENT AND TOP OF EACH VALVE. CHECK NOZZLING FOR PROPER COVERAGE. PREVAILING WIND CONDITIONS MAY INDICATE THAT ARC OF ANGLE OF SPRAY SHOULD BE OTHER THAN SHOWN ON DRAWINGS. IN THIS CASE, CHANGE NOZZLES TO PROVIDE CORRECT COVERAGE.

NOTE: SMART IRRIGATION CONTROLLER TO BE PROVIDED ON EVERY IRRIGATION SYSTEM INCLUSIVE OF THE FOLLOWING:

- RAINBIRD ESP-LXME CONTROLLER
- RAINBIRD ETMRG RAIN GAUGE
- RAINBIRD ETC-LX ET MANAGE CARTRIDGE

GENERAL IRRIGATION NOTES

1. ALL PVC SLEEVING SHALL EXTEND 18" INTO PERVIOUS LANDSCAPE AREAS.
2. VALVES AND PIPING SHALL BE INSTALLED WITHIN THE LIMIT OF DISTURBANCE FOR OTHER WORK AND IN CORRELATION WITH FIELD CONDITIONS.
3. IRRIGATION CONTRACTOR TO ENSURE ADEQUATE COVER OVER ALL PIPING.
4. A FLOW TEST SHOULD BE PERFORMED PRIOR TO INSTALLATION OF THE SYSTEM. GC TO ENSURE ADEQUATE WATER PRESSURE IS AVAILABLE. IF THERE IS INSUFFICIENT PRESSURE AT THE POINT OF CONNECTION, A BOOSTER PUMP MAY BE REQUIRED.
5. LOCATION OF IRRIGATION COMPONENTS WITHIN THE BUILDING SHOULD CORRELATE WITH ARCHITECTURAL PLAN SET.
6. ALL IRRIGATION COMPONENTS SHOULD BE ADJUSTED IN THE FIELD TO CORRELATE WITH EXISTING AND PROPOSED UTILITIES.

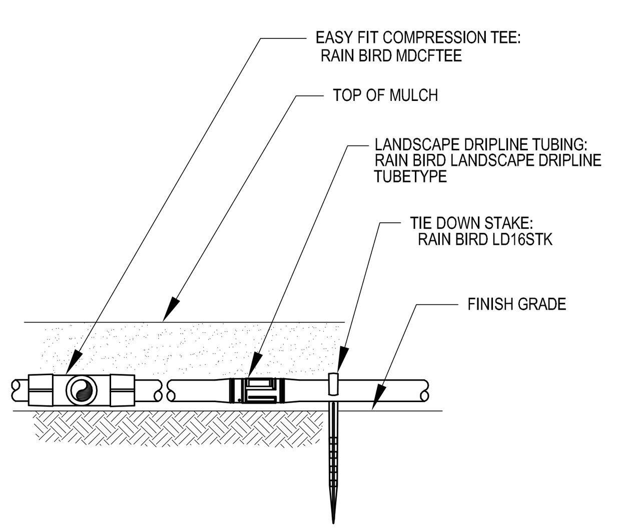

LANDSCAPE DRIPLINE ON GRADE POTABLE SYSTEM

(NOT TO SCALE)

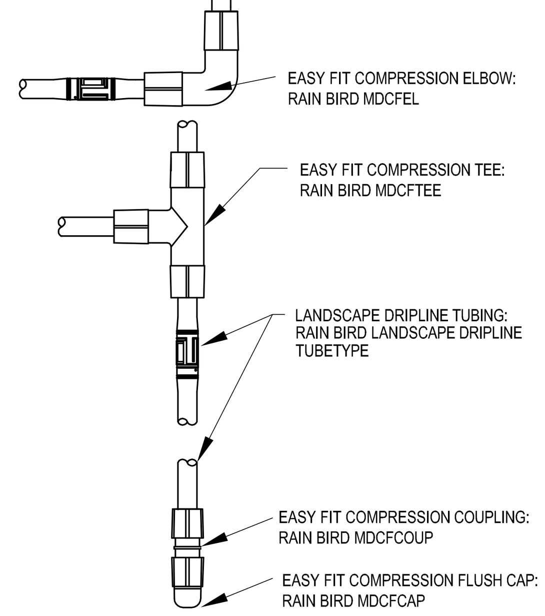

DRIP LINE EASY FIT COMPRESSION FITTINGS

(NOT TO SCALE)

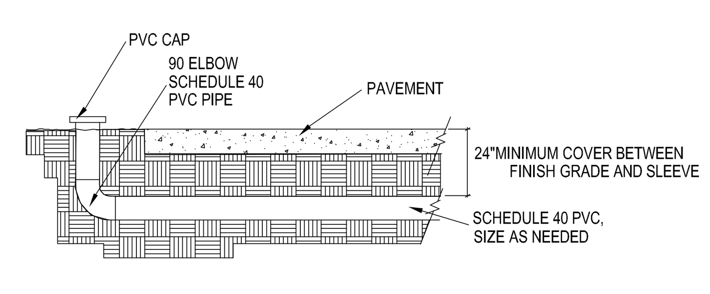

SLEEVE DETAIL

(NOT TO SCALE)

IRRIGATION NOTE:

CONTRACTOR TO PROVIDE AN IRRIGATION DESIGN FOR BOTH LAWN & BED AREAS. DESIGN IS TO BE SUBMITTED TO THE PROJECT LANDSCAPE ARCHITECT FOR REVIEW AND APPROVAL. CONTRACTOR TO VERIFY STATIC PRESSURE PRIOR TO DESIGN. CONTRACTOR IS ALSO RESPONSIBLE FOR ANY PRESSURE REDUCING DEVICES REQUIRED TO MEET MAXIMUM PRESSURE REQUIREMENT. SYSTEM DESIGN TO SHOW ALL VALVES, PIPING, HEADS, BACKFLOW PREVENTION, METERS AND CONTROLLERS. ALL SLEEVES IN PAVEMENT AREAS MUST BE SHOWN. THE CONTRACTOR SHALL BE RESPONSIBLE FOR BACKFLOW PREVENTION DEVICE INSTALLATION AND PERMITTING.

THIS PLAN TO BE UTILIZED FOR IRRIGATION PURPOSES ONLY

BOHLER ENGINEERING
CIVIL & CONSULTING ENGINEERS
SURVEYORS
PROJECT MANAGERS
ENVIRONMENTAL CONSULTANTS
LANDSCAPE ARCHITECTS
CORPORATE OFFICE: WARREN, NJ
OFFICES: SOUTHBOROUGH, MA; BOWIE, MD; TOWSON, MD; ALBANY, NY; HAUPPAUGE, NY; CENTER VALLEY, PA; CHALFONT, PA; PHILADELPHIA, PA; STERLING, VA; WARRENTON, VA; FORT LAUDERDALE, FL; TAMPA, FL; CHARLOTTE, NC

THE INFORMATION, DESIGN AND CONTENT OF THIS PLAN ARE PROPRIETARY AND SHALL NOT BE COPIED OR USED FOR ANY PURPOSE WITHOUT PRIOR WRITTEN AUTHORIZATION FROM BOHLER ENGINEERING. ONLY APPROVED, SIGNED AND SEALED PLANS SHALL BE UTILIZED FOR CONSTRUCTION PURPOSES. c 2008 BOHLER ENGINEERING.

REVISIONS

REV	DATE	COMMENT	BY
1			
2			
3			
4			
5			
6			
7			
8			
9			
10			
11			
12			
13			
14			
15			

PRELIMINARY

PROJECT No.:	W111088
DRAWN BY:	DML
CHECKED BY:	RMM/JGS
DATE:	12/12/2013
SCALE:	AS NOTED
CAD I.D.:	W111088SS0

PROJECT:

SITE PLAN DOCUMENTS

FOR

TD Bank

LOCATION OF SITE
PLOTS 4, 5, 6 AND 15C, MAP 1106
476-486 SOUTHERN ARTERY
CITY OF QUINCY
NORFOLK COUNTY
MASSACHUSETTS

BOHLER ENGINEERING
352 TURNPIKE ROAD
SOUTHBOROUGH, MA 01772
Phone: (508) 480-9900
Fax: (508) 480-9080
www.BohlerEngineering.com

W.D. GOEBEL
PROFESSIONAL ENGINEER
MASSACHUSETTS LICENSE No. 42644
RHODE ISLAND LICENSE No. 7268
CONNECTICUT LICENSE No. 21854
NEW HAMPSHIRE LICENSE No. 10280
MAINE LICENSE No. 9490
NEW YORK LICENSE No. 071284-1
FLORIDA LICENSE No. 66202

SHEET TITLE:

IRRIGATION NOTES & DETAILS

SHEET NUMBER:

11
OF 14

REV 0 - 12/12/2013

P:\11\W111088\DWG\W111088ss0.dwg , 11-Irrigation, 4/23/2010, 10:17:14 AM, cdesocio, XeroX510-1.pc3, User634, 1:1